Stainless Steel Single Gang

60A 480VAC

Catalog No: E1-R60-480-50-22SSD-SP
Item No: 2203-22LW

Features

- UL Listed 1-gang assembly complete with UL Listed safety-interlocked module containing an integral 50A circuit breaker
- Type 4X enclosure manufactured from 14GA seam-welded stainless steel powder-coated texture gray (RAL7038)
- Factory installed safety-interlocked ESL module #1700-55A
- UL Listed circuit breaker rated 22kAIC @ 480VAC provides short circuit & overcurrent protection
- Actuator rod allows user to turn on/off and reset tripped breaker
- Universal mounting – requires (4) fasteners
- Gasketed bolt-on access cover

Drawing

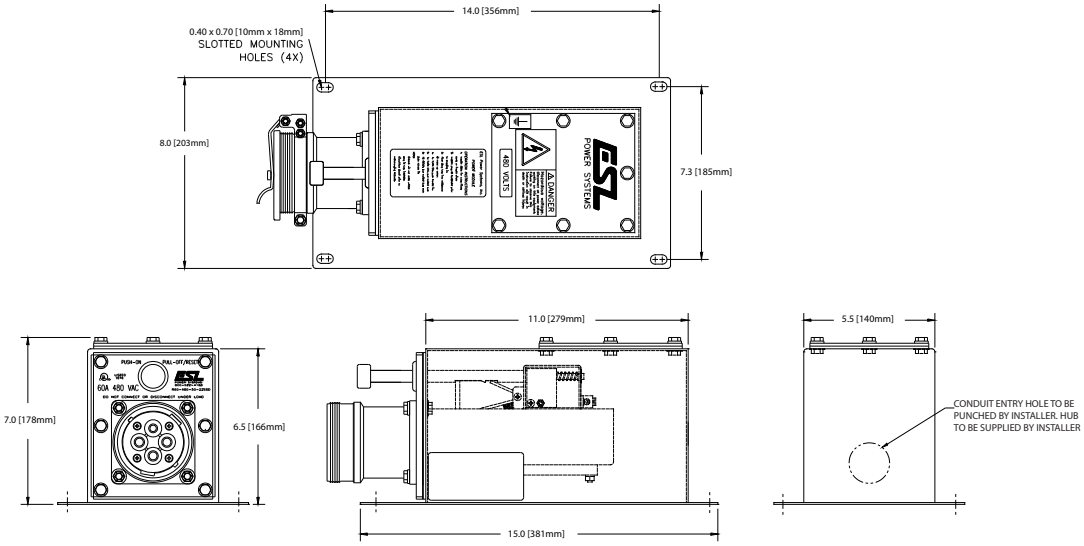

Approvals

- UL/cUL Listed module
- UL/cUL Listed assembly
- UL 489 Listed / CSA certified molded case circuit breaker

ESL Power Systems, Inc. | 2800 Palisades Dr. | Corona, CA 92880 | 800.922.4188 | +1.951.739.7020 | www.eslpwr.com | info@eslpwr.com

©2017 ESL Power Systems, Inc. All rights reserved

Specifications

Catalog No: E1-R60-480-50-22SSD-SP
Item No: 2203-22LW

Ratings

Receptacle	60A 480VAC, 3 phase 3 wire + ground
Circuit breaker	50A trip, 22,000AIC @ 480VAC, other trip and AIC ratings available - contact factory
Environmental	Type 4X/IP66
Terminals	Installer wires direct to circuit breaker: (3) phase & (1) ground pressure type screw terminals, Phases: #10 - 1/0 (4-50mm^2) wire range, Ground: #14 - #2 AWG (2-33mm^2) wire range

Materials

Stainless steel	Enclosure, access cover, module frame, on/off rod, interlock mechanism, contact terminal screws & spring, receptacle housing, snap cover and all fasteners
Nickle plated brass	Contact sleeves
Rynite®	Receptacle insert
Buna-N (Nitrile/NBR)	O-rings, gaskets, snap cover seal

Packaging

Product weight	16 lbs.
Shipping weight	17 lbs.
Shipping dimensions	16in x 8in x 8in

Replacement Parts

Description	Item No.	Description	Item No.
Safety-interlocked power module	1700-55A	Screw cover & tether assembly (optional)	1500-14
Stainless steel snap cover assembly	1501-35	Circuit breaker kit	4020-06
Replacement receptacle kit	4010-38	Ground sleeve kit	4016-12
Receptacle insert kit	4010-62	Phase sleeve kit	4015-04

ESL Power Systems, Inc. | 2800 Palisades Dr. | Corona, CA 92880 | 800.922.4188 | +1.951.739.7020 | www.eslpwr.com | info@eslpwr.com

©2017 ESL Power Systems, Inc. All rights reserved